LET.	REVISION	DRN. BY	DATE
A	ITEMS 9, 10, 11 CHANGED TUBE OD FROM .375" TO .50" & WALL FROM .049" TO .065", CLAW PICK UP TOOL ADDED	JASHWORTH	10/21/2009
B	REVISED 7, 8, 9. ADDED 12, 15-40, $1004, $1013, $1018 - $1022	SDONNELLY	6/1/2010
C	SHT 6 ADDED, RETRIEVAL TOOLS REDESIGNED WITH MODIFIED AND ADDITIONAL PARTS, DESCRIPTION CHANGE.	JASHWORTH	7/15/2010
D	JOB DESCRIPTION CHANGE. PROJECT QUANTITY CHANGED FROM 3 TO 1.	JASHWORTH	7/27/2010
E	DRAWING NAME CHANGED	BCOTTEN	10/5/2010
F	REVISED P/N OR DESCRIPTION TO FIT BOM, ITEM 1008 DELETED, ITEM 1013 NOW 400ML CARTRIDGE, ADDED ITEMS 1008, 1024, ITEMS 1017,1018,1019 QTYS CHANGED.	VZEKANY	1/5/2011
G	ITEM 48 ADDED	JASHWORTH	2/9/2012

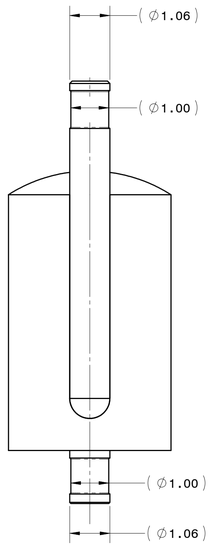

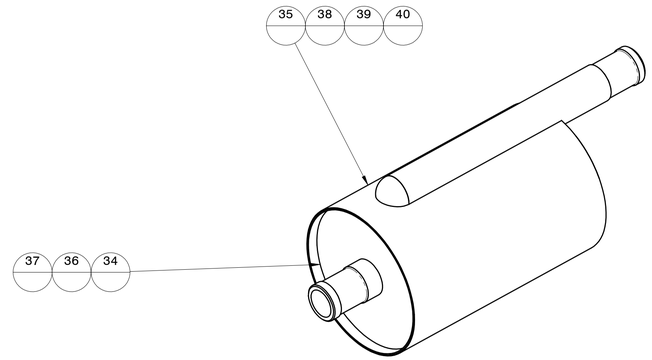

ASSEMBLY NOTES:-

1) PRE-ASSEMBLE FILTER ELEMENT AND INLET NOZZLE ASSEMBLY USING HIGH TEMPERATURE EPOXY GLUE AND ALLOW TO CURE. NOTE THAT CENTERLINES ARE OFFSET

2) ASSEMBLE THE FILTER ELEMENT/NOZZLE ASSY INTO THE FILTER HOUSING WITH THE FILTER ELEMENT OFFSET, FIX IN PLACE BY TACK WELDING AND SEALING AIR TIGHT WITH HIGH TEMPERATURE EPOXY GLUE AND ALLOW TO CURE.

3) PAINT AS FOLLOWS
   PAINT - AECL IMPERIAL BLUE
   PAINT TYPE - HIGH SOLIDS EPOXY
   PAINT PRODUCT NUMBER - 224
   MANUFACTURER - DEVOE COATINGS

4) THIS SHEET SHOWS MAKE UP OF ITEM 1004 PURCHASED COMPLETE AS SHOWN ON THIS SHEET

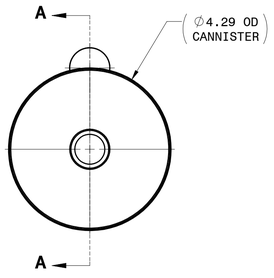

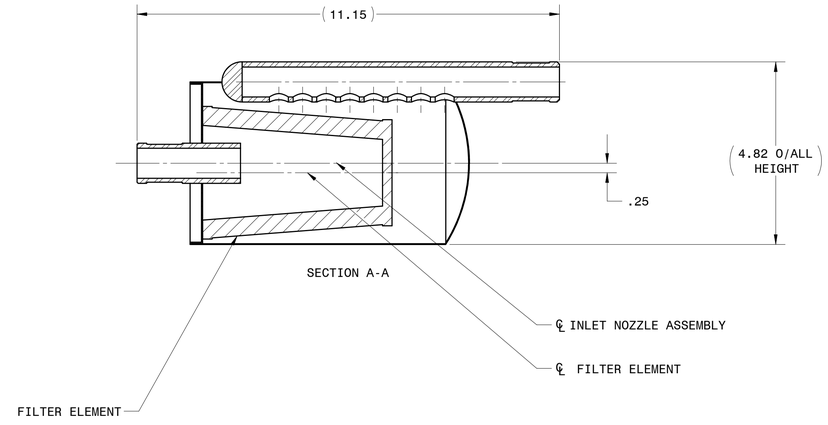

Material	Finish	Heat Treat	QTY.	TOTAL
	NONE	NONE	1	1

Drawn By
JAMES ASHWORTH
Date
JUL 15 2010

AUTOMATION TOOLING SYSTEMS INC.
250 ROYAL OAK ROAD, CAMBRIDGE, ONT. N3H 5M2

Unless Otherwise Specified

Machining Tolerances	.000 ± .005	
	.00 ± .010	
Angle ± .5°	.0 ± .030	
Weldment/Fabrication Tolerances		
Wat'l Thickness (1" or less)	0 - 12 ± .030	
	>12 - 36 ± .060	
Length (inches)	>36 - 80 ± .125	
Wat'l Thickness (> 1")	0 - 12 ± .060	
	>12 - 36 ± .125	
Length (inches)	>36 - 80 ± .250	

Unless Otherwise Specified
-Dimensions apply after finish
-Break all sharp corners to Min .005, Max .015
-Do not machine stock sizes
-All machined surfaces to be 125 (Ra) or better

3rd Angle Projection
-Do not scale drawing
-Dimensions are in inches

ATOMIC ENERGY OF CANADA
VRS
VRS INSPECTION & RETRIEVAL TOOLS
FILTER ASSEMBLY

Drawing No.	JDE Item No.	Rev.
D-12995-1254-0000	-	G

Scale	Job No.	Sheet	of
1:2		6	6

Candu
☐ ACCEPTED AS NOTED ☒ ACCEPTED ☐ NOT ACCEPTED

Signature	Representing	Date
[signature]	Reactor Fuel Handling	2012/06/06

"The use and meaning of "ACCEPTED" is governed by the terms and conditions of the P.O. Ref. No. 8700-22000 and in any event in use does not relieve the manufacturer of any of its obligations to Candu Energy Inc. and/or to its Client".

PROTECTED - SENSITIVE
PROTEGE - DELICAT

Drawing Number: RT-87630-71254-1000-6-GA-D Rev.: 1

DDM-D.sldsrt North America

Plot Date: Feb 17 2012 Agnes Roy